REV	ECN	DATE	BY	CHANGE OR ADDITION
NC	1059	04/30/2013	LUND	INITIAL RELEASE
A	1102	10/04/2013	LUND	ADDED DUAL DIMENSIONS, CONNECTION BRACKET CLARIFICATION
B	1188	5/16/2014	LUND	ADAPTOR MOUNT UPDATED

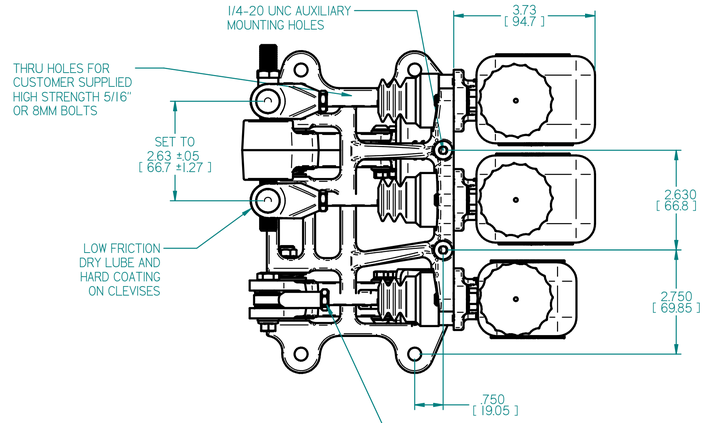

DO NOT EXCEED 3 DEGREES OF PUSHROD ANGULARITY DURING STROKE OF PEDALS. PREMATURE MASTER CYLINDER WEAR MAY OCCUR.

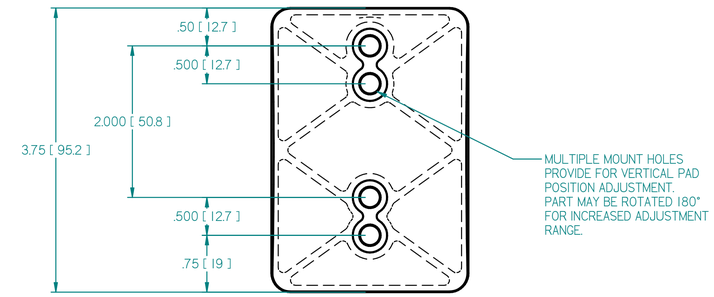

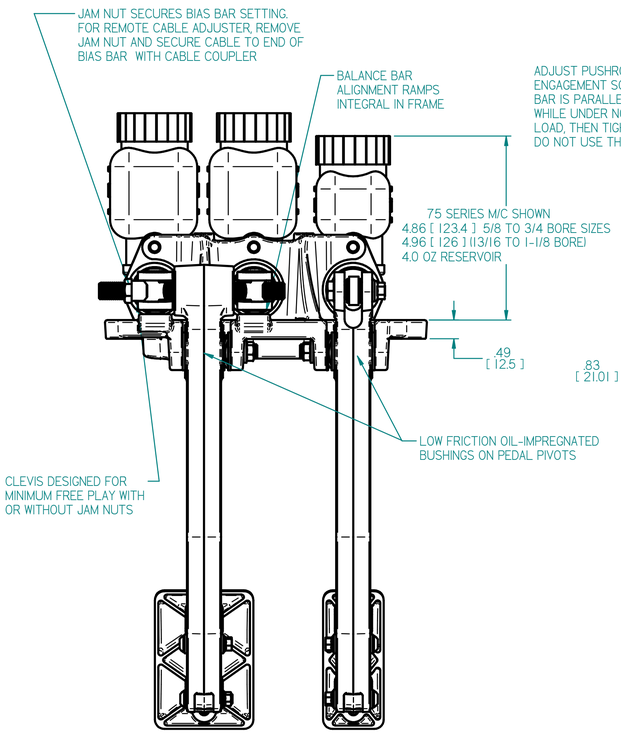

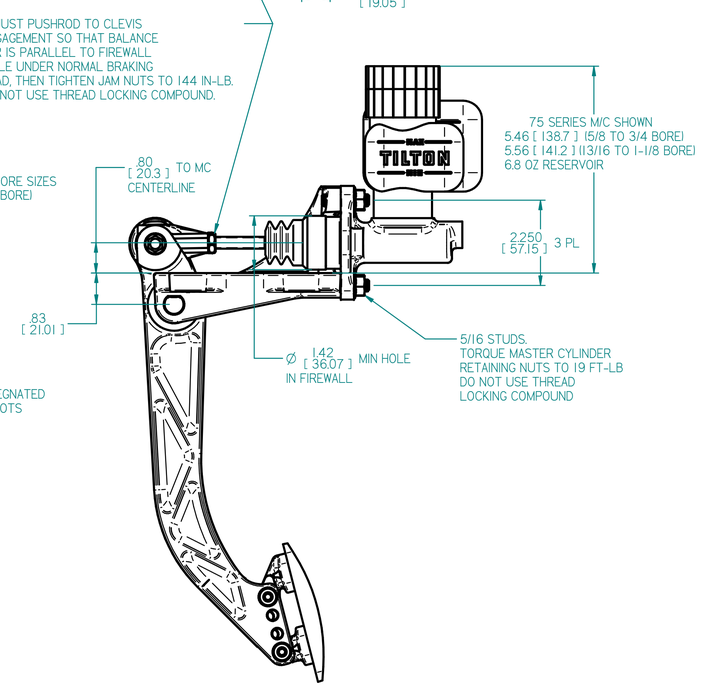

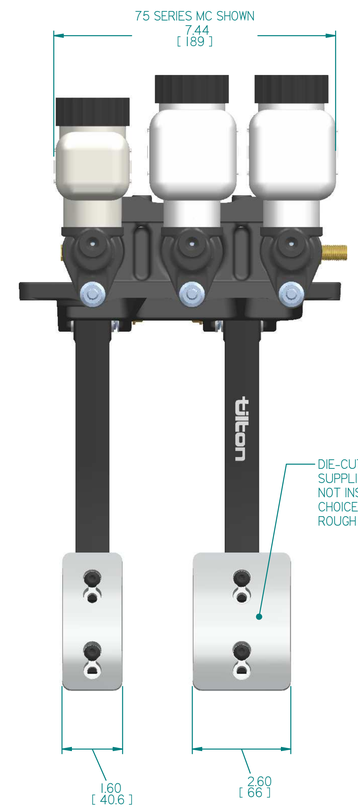

PEDAL RATIO WILL VARY FROM 5.0:1 TO 6.2:1 BASED ON PEDAL PAD POSITION.

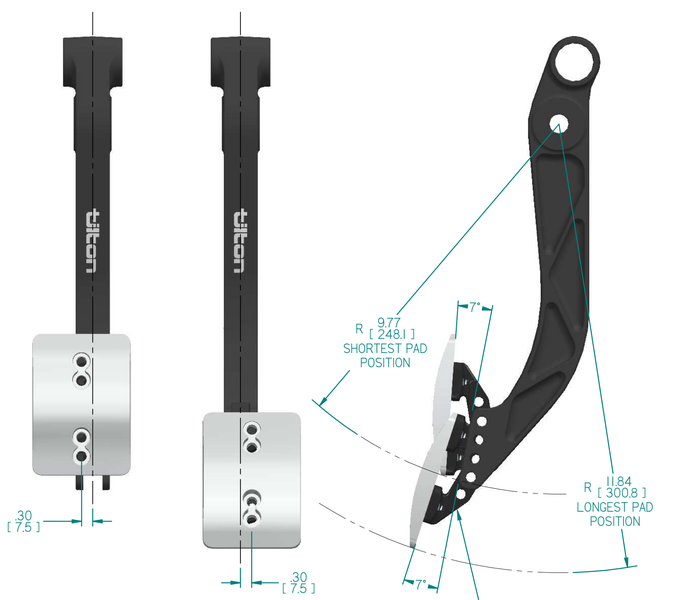

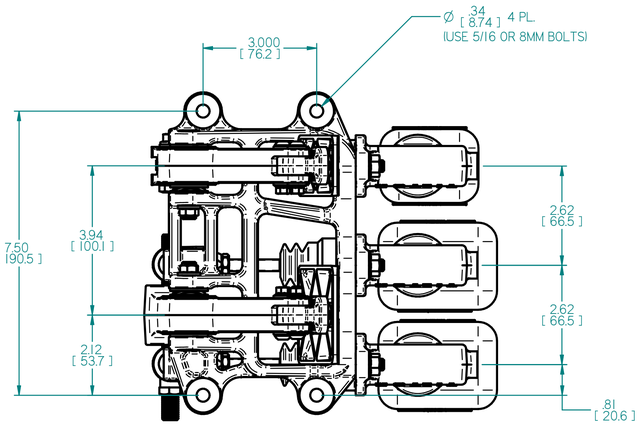

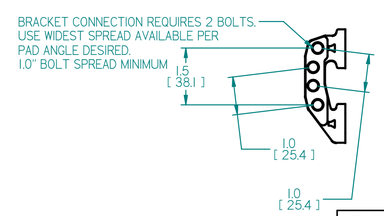

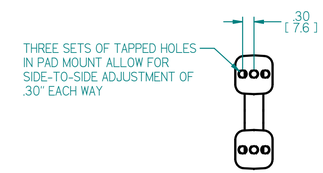

NOTES:

1. DIMENSIONS AND TOLERANCES PER ASME Y14.5 - 2009
2. UNLESS OTHERWISE SPECIFIED, ALL DIMENSIONS ARE IN INCHES [MM].
3. DIMENSIONS ARE NOMINAL.

PEDAL ASSEMBLY IS COMPATIBLE WITH TILTON ENGINEERING 73, 74, 75 OR 76 SERIES MASTER CYLINDERS SOLD SEPARATELY

75 SERIES MASTER CYLINDERS SHOWN HERE ARE FOR ILLUSTRATION PURPOSES ONLY AND ARE NOT INCLUDED WITH PEDAL ASSEMBLY

TILTON ENGINEERING, INC.
(805) 688-2353 FAX (805) 688-2745
25 EASY STREET P.O. BOX 1787 BUELLTON, CALIFORNIA 93427 USA

TITLE: PEDAL ASSEMBLY INSTALLATION DRAWING
TWO PEDAL, THREE CYLINDER, OVERHUNG MOUNT, ALUMINUM

DRN BY	WAHL	CHK'D	LUND	SCALE 1 : 2	DWG	REV
P/N	72-608	DATE	04/30/2013	SHEET 1 OF 1	5827	B

"This document contains proprietary information of TILTON ENGINEERING, INC., and its receipt or possession does not convey the rights to reproduce, disclose its contents, or to manufacture, use or sell anything it may describe. Reproduction, disclosure, or use without specific written authorization of TILTON ENGINEERING, INC. is strictly forbidden."

TILTON ENGINEERING